Liquid Crystal Display Television
Service Manual

Chassis： MSD209FG

Product Type：

Ver 1.0

Hisense Electric Co.， Ltd.

February , 2010

Contents

Contents - 2 -
Service Manual - 3 -
1. Precautions and notices - 3 -
1.1 WARNING - 4 -
1.2 NOTES - 7 -
2. Factory/Service OSD Menu and Adjustment - 10 -
2.1 To enter the Factory OSD Menu - 10 -
2.2 Factory OSD Menu - 10 -
3. UPDATE SOTFWRE - 15 -
3.1 Before upgrading, read the following. - 15 -
3.2 UPDATE The MAIN SOFTWARE - 15 -
3.3 UPDATE The MEMC SOFTWARE - 16 -
4. Troubleshooting - 17 -
4.1 Troubleshooting for Remote Control - 17 -
4.2 Troubleshooting for Function Key - 18 -
4.3 TV won't Power On - 19 -
4.4 Troubleshooting for Audio - 20 -
4.5 Troubleshooting for TV/VGA/HDMI input - 21 -
4.6 Troubleshooting for YPbPr input - 22 -
4.7 Troubleshooting for Video/S-Video/ SCART input - 23 -
5. Schematic circuit diagram - 24 -

Service Manual

1. Precautions and notices

BEFORE SERVICING THE LCD TV, READ THE SAFETY PRECAUTIONS IN THIS MANUAL.

WHEN REPLACEMENT PARTS ARE REQUIRED, BE SURE TO USE REPLACEMENT PARTS SPECIFIED BY THE MANUFACTURER.

Proper service and repair is important to the safe, reliable operation of all Hisense Electric Co., Ltd Equipment. The service procedures recommended by Hisense and described in this Service Guide are effective methods of performing service operations. Some of these service operations require the use of tools specially designed for the purpose. The special tools should be used when and as recommended.

It is important to note that this manual contains various CAUTIONS and NOTICES which should be carefully read in order to minimize the risk of personal injury to service personnel. The possibility exists that improper service methods may damage the equipment. It is also important to understand that these CAUTIONS and NOTICES ARE NOT EXHAUSTIVE. Hisense could not possibly know, evaluate and advise the service trade of all conceivable ways in which service might be done

or of the possible hazardous consequences of each way. Consequently, Hisense has not undertaken any such broad evaluation. Accordingly, a serviceman that uses a service procedure or tools, which are not recommended by Hisense, must first satisfy himself thoroughly that neither his safety nor the safe of the equipment will be jeopardized by the service method selected.

Hereafter throughout this manual, Hisense Electric Co., Ltd will be referred to as Hisense.

1.1 WARNING

1.1.1

Critical components having special safety characteristics are identified with a ▲ by the Ref. No. in the parts list. Use of substitute replacement parts, which do not have the same specified safety characteristics, may create shock, fire, or other hazards. Under no circumstances should the original design be modified or altered without written permission from Hisense. Hisense assumes no liability, express or implied, arising out of any unauthorized modification of design. Serviceman assumes all liability.

DANGER CAUTION

TO ENSURE THE CONTINUED RELIABILITY OF THIS PRODUCT, USE ONLY ORIGINAL MANUFACTURER'S REPLACEMENT PARTS, WHICH ARE LISTED WITH THEIR PART NUMBERS IN THE PARTS LIST SECTION OF THIS SERVICE GUIDE.

1.1.2.

All ICs and many other semiconductors are susceptible to electrostatic discharges (ESD). Careless handling during repair can reduce life drastically. When repairing, make sure that you are connected with the same potential as the mass of the set by a wristband with resistance. Keep components and tools also at this same potential.

1. Never replace modules or other components while the unit is switched on.

2. When making settings, use plastic rather than metal tools. This will prevent any short circuits and the danger of a circuit becoming unstable.

1.1.3

To prevent electrical shock, do not use this polarized ac plug with an extension cord, receptacle, or the outlet unless the blades can be fully inserted to prevent blade exposure.

To prevent electrical shock, match wide blade or plug to wide slot, fully insert.

1.1.4

When replacement parts are required, be sure to use replacement parts specified by the manufacturer or have the same characteristics as the original part. Unauthorized substitutions may result in fire, electric shock, or other hazards.

1.1.5

Safety regulations require that after a repair the set must be returned in its original condition. In particular attention should be paid to the following points.

-Note: The wire trees should be routed correctly and fixed with the mounted cable clamps.

-The insulation of the mains lead should be checked for external damage.

1.1.6

(1) Do not touch Signal and Power Connector while this product operates. Do not touch EMI ground part and Heat Sink of Film Filter.

(2) Do not supply a voltage higher than that specified to this product. This may damage the product and may cause a fire.

(3) Do not use this product in locations where the humidity is extremely high, where it may be splashed with water, or where flammable materials surround it. Do not install or use the product in a location that does no satisfy the specified environmental conditions. This may damage the product and may cause a fire.

(4) If a foreign substance (such as water, metal, or liquid) gets inside the panel module, immediately turn off the power. Continuing to use the product may cause fire or electric shock.

(5) If the product emits smoke, and abnormal smell, or makes an abnormal sound, immediately turn off the power. Continuing to use the product, it may cause fire or electric shock.

(6) Do not disconnect or connect the connector while power to the product is on. It takes some time for the voltage to drop to a sufficiently low level after the power has been turned off. Confirm that the voltage has dropped to a safe level before

disconnecting or connecting the connector.

(7) Do not pull out or insert the power cable from/to an outlet with wet hands. It may cause electric shock.

(8) Do not damage or modify the power cable. It may cause fire or electric shock.

(9) If the power cable is damaged, or if the connector is loose, do not use the product: otherwise, this can lead to fire or electric shock.

(10) If the power connector or the connector of the power cable becomes dirty or dusty, wipe it with a dry cloth. Otherwise, this can lead to fire.

(11) Use only with the cart, stand, tripod, bracket, or table specified by the manufacturer, or sold with the apparatus. When a cart is used, use caution when moving the cart/apparatus combination to avoid injury from tip-over.

1.2 NOTES

Notes on Safe Handling of the LCD panel and during service

The work procedures shown with the Note indication are important for ensuring the safety of the product and the servicing work. Be sure to follow these instructions.

• Before starting the work, secure a sufficient working space.

• At all times other than when adjusting and checking the product, be sure to turn OFF the POWER Button and disconnect the power cable from the power source of the TV during servicing.

• To prevent electric shock and breakage of PC board, start the servicing work at least 30 seconds after the main power has been turned off. Especially when installing and

removing the power board, start servicing at least 2 minutes after the main power has been turned off.

• While the main power is on, do not touch any parts or circuits other than the ones specified. If any connection other than the one specified is made between the measuring equipment and the high voltage power supply block, it can result in electric shock or activation of the leakage-detection circuit breaker.

• When installing the LCD module in, and removing it from the packing carton, be sure to have at least two persons perform the work.

• When the surface of the panel comes into contact with the cushioning materials, be sure to confirm that there is no foreign matter on top of the cushioning materials before the surface of the panel comes into contact with the cushioning materials. Failure to observe this precaution may result in, the surface of the panel being scratched by foreign matter.

• When handling the circuit board, be sure to remove static electricity from your body before handling the circuit board.

• Be sure to handle the circuit board by holding the large parts as the heat sink or transformer. Failure to observe this precaution may result in the occurrence of an abnormality in the soldered areas.

• Do not stack the circuit boards. Failure to observe this precaution may result in problems resulting from scratches on the parts, the deformation of parts, and short-circuits due to residual electric charge.

• Routing of the wires and fixing them in position must be done in accordance with the original routing and fixing configuration when servicing is completed. All the wires are routed far away from the areas that become hot (such as the heat sink). These wires are fixed in position with the wire clamps so that the wires do not move, thereby ensuring that they are not damaged and their materials do not deteriorate over long periods of time. Therefore, route the cables and fix the cables to the original position and states using the wire clamps.

• Perform a safety check when servicing is completed. Verify that the peripherals of the serviced points have not undergone any deterioration during servicing. Also verify that the screws, parts and cables removed for servicing purposes have all been returned to their proper locations in accordance with the original setup.

The lightning flash with arrowhead symbol, within an equilateral triangle is intended to alert the user to the presence of uninsulated dangerous voltage within the products enclosure that may be of sufficient magnitude to constitute a risk of electric shock.

The exclamation point within an equilateral triangle is intended to alert the user to the presence of important operating and maintenance (servicing) instructions in the literature accompanying the set.

2. Factory/Service OSD Menu and Adjustment

2.1 To enter the Factory OSD Menu

a. With factory RC (remote control)

1. Press “M” button and enter factory mode.
2. Press “Menu” button and enter factory OSD menu.
3. Press “CH+”/“CH-” button select the function menu, press “VOL+”/“VOL-” enter the selected function menu. Press “VOL+”/“VOL-” button adjust values in the menu.
4. Press “M” button exit factory mode in the factory OSD menu.

When TV outgoing factory,user can not enter factory OSD menu with Factory Remote

b. With user’s RC

1. Power TV On
2. Press Menu button and call up User OSD Menu
3. Select Sound-> Balance
4. When Balance value is “0”,Enter 0->5->3 ->2 in sequence.
   Note: If necessary, re-do number keys.
5. Factory OSD appears.
6. Press the standby button then AC turn off and restart the TV, which can exit factory OSD menu.

2.2 Factory OSD Menu

The Factory OSD Menu comprises Factory Menu and Design Menu .

2.2.1、Factory Menu

Factory Menu

WhiteBalance
ADC Calibration
Language
Function
FactoryInit
Test Pattern
Version

White Balance

Mode
ColourTemp
R-GAIN:
G-GAIN:
B-GAIN:
R-OFFSET:
G-OFFSET:
B-OFFSET:

ADC Calibration

AUTO ADC

R-GAIN:
G-GAIN:
B-GAIN:

R-OFFSET:
G-OFFSET:
B-OFFSET:

Language

Language English

Function
TOFAC M
TOP
BACKLIGHTCUR1
BACKLIGHTCUR2
BACKLIGHTCUR3
BACKLIGHTCUR4
BACKLIGHTCUR5
BACKLIGHT ON/OFF

Factory Init

QingDao
HuangDao
Guiyang
Shunde
Hungary
France
ZiBo
ClearProtect
ClearUnProtect

Test Pattern OFF

VERSION:

SoftwareVersion

PanelVersion

2.2.2、Design Menu

Design Menu

Picture Mode
Sound Mode
Picture Curve
Sound Curve
SSC Adjust
Over Scan

Picture Mode

Mode	
Picture Mode	**Standard**
	Soft
	User
	Bright
BRIGHTNESS	**50**
C0NTRAST	**50**
COLOR	**50**
SHARPNESS	**50**
TINT	**50**

Sound Mode

Mode	**Standard**
	Music
	Movie
	Speech

120HZ
500HZ
1.2KHZ
7.5KHZ
12KHZ

Picture Curve

MODE	**Brightness**
	Sharpness
	Color
	Contrast
	TINT

OSD_0
OSD_25
OSD_50
OSD_75
OSD_100

Sound Curve
MODE ATV VOL
AV VOL
HDMI VOL
120HZ/500HZ/
1.5KHZ/5KHZ
/10KHZ
OSD_0
OSD_25
OSD_50
OSD_75
OSD_100
Chl Prescale

SSC Adjust

SSC MIU ON
MIU SPAN
MIU STEP

SSC LVDS
LVDS SPAN
LVDS STEP

Over Scan

H_Size
H_Pos
V_Size
V_Pos

Note：

The above "Factory/Service OSD Menu" are reference only, please refer to the actual units to determine the appearances.

3. UPDATE SOTFWRE

3.1 Before upgrading, read the following.

1、Before upgrading，Write down the ADC Calibration values of the channel of VGA and component。

2、Upgrade the software.

3、To clear the EEPROM .

A Select the item “Clear Unprotected”.

B Press VOL+ button to clear the EEPROM data.

C Close the OSD menu after 5 seconds.

D Restart the TV.

4 Write the ADC Calibration values copied just now into the the channels of VGA and component.

5、After the operation above all, necessarily, Renew search the channels for the users.

3.2 UPDATE The MAIN SOFTWARE

MSD209FG Series can update with USB, the Main software name should be “HISENSE_209.bin”. Insert the U disc to the USB slot. Press “Source" button on the remote control and press “▲”or “▼”button to choose “HDMI", then press the red “◀◀”button on the remote control. Press “◀” button to choose “YES” on the screen .It will start to update automatically. When the process turn to 100% ,it indicates the new edition of the software updating is complete. After that TV will restart automatically. After updating, you should confirm the edition of the software in the “Factory lint” and you'd better select " ClearUnProtect" to comeback the factory data.

3.3 UPDATE The MEMC SOFTWARE

The MEMC software can update with USB. The new edition software should be named “MST_FLASH.bin”. Insert the U disc to the USB slot. Press “Source" button on the remote control and press “▲”or “▼”button to choose “VGA", then press the red “◀◀”button on the remote control. Press “◀” button to choose “YES” on the screen .It will start to update automatically. When the process turn to 100% ,it indicates the new edition of the software updating is complete. After that TV will restart automatically.

NOTE: Don’t power off when updating.

4. Troubleshooting

4.1 Troubleshooting for Remote Control

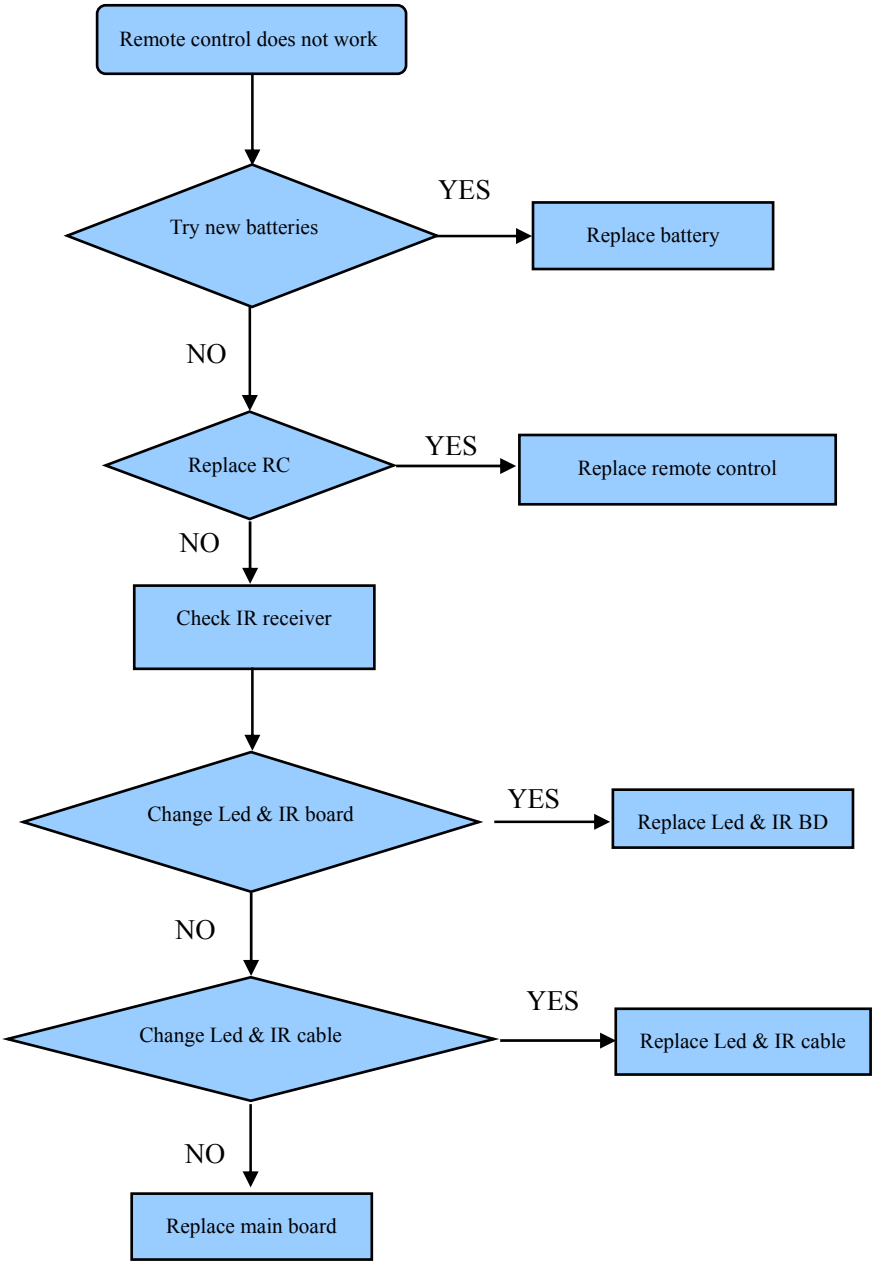

4.2 Troubleshooting for Function Key

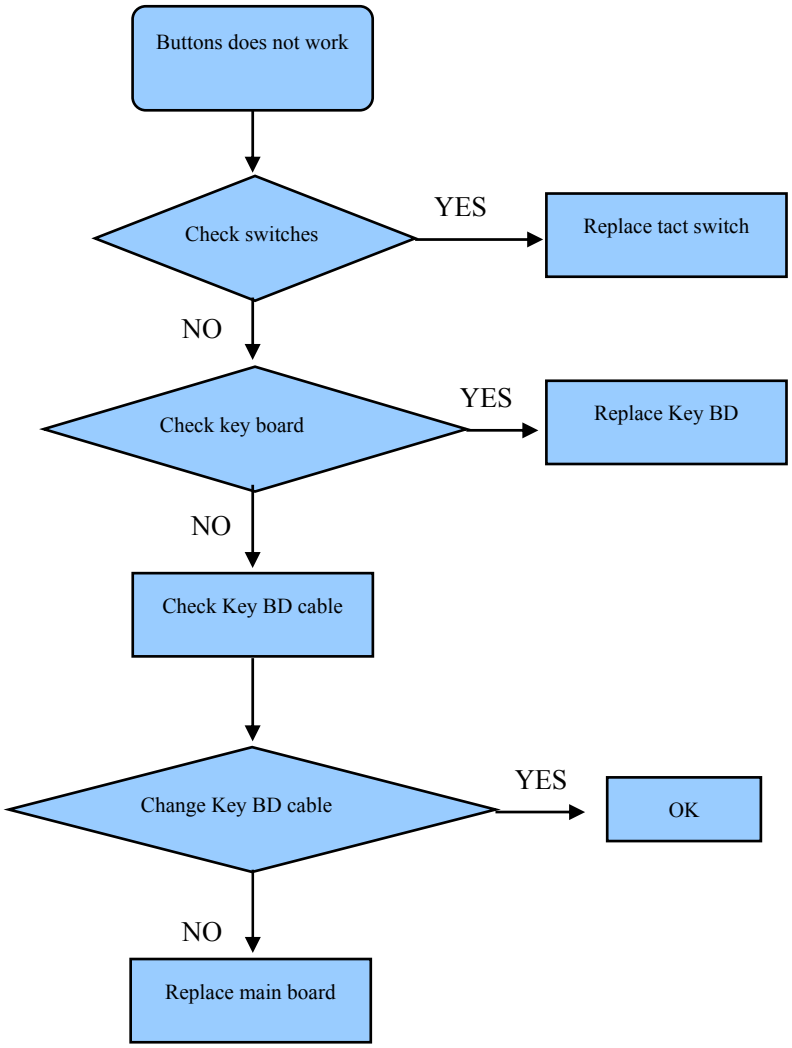

4.3 TV won't Power On

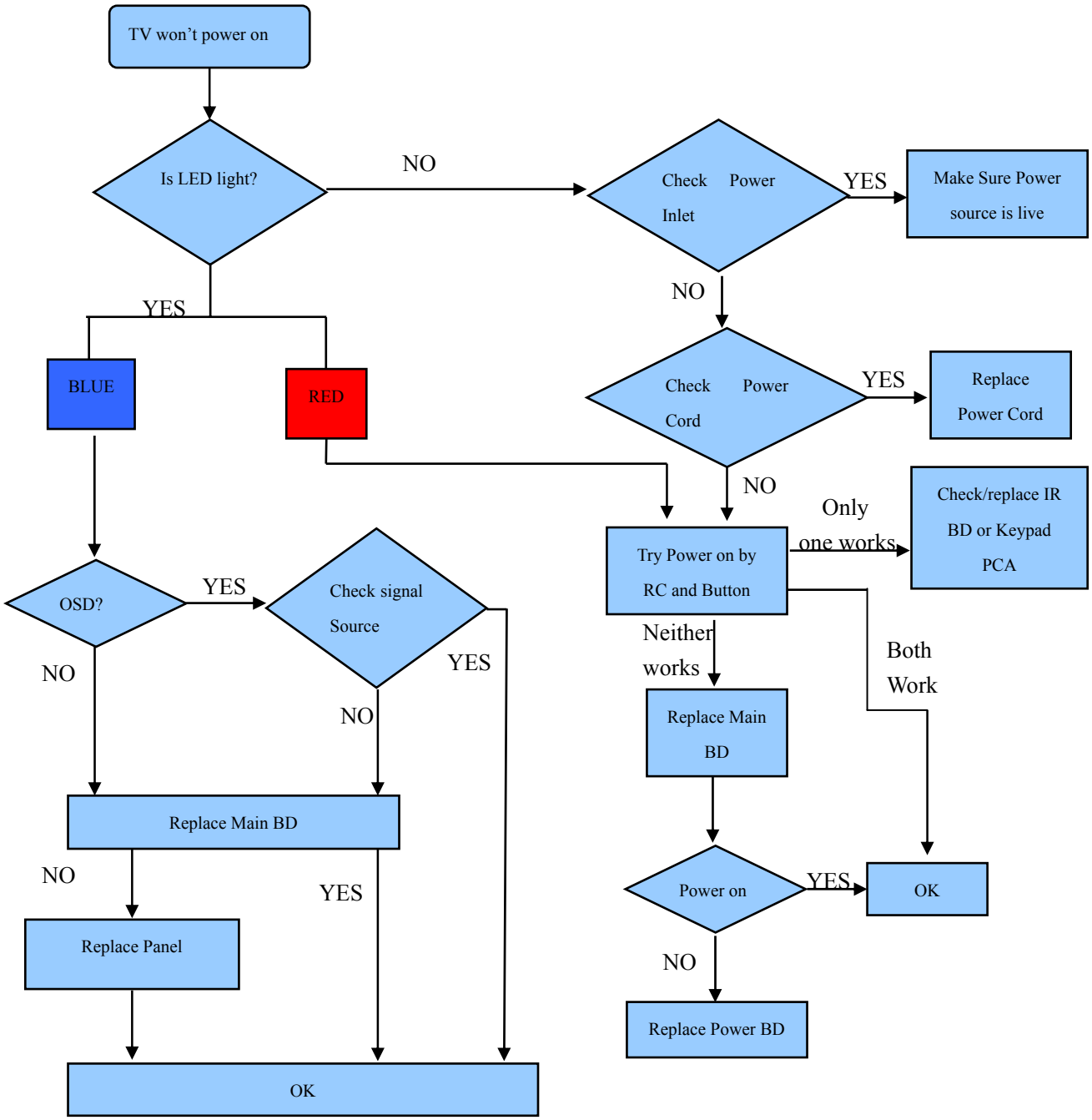

4.4 Troubleshooting for Audio

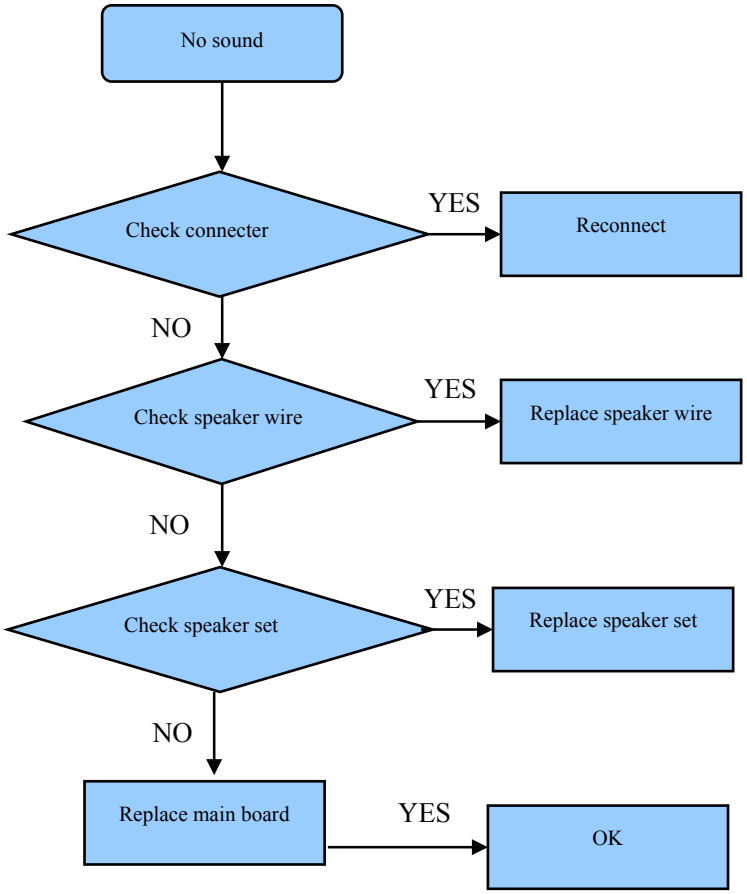

4.5 Troubleshooting for TV/VGA/HDMI input

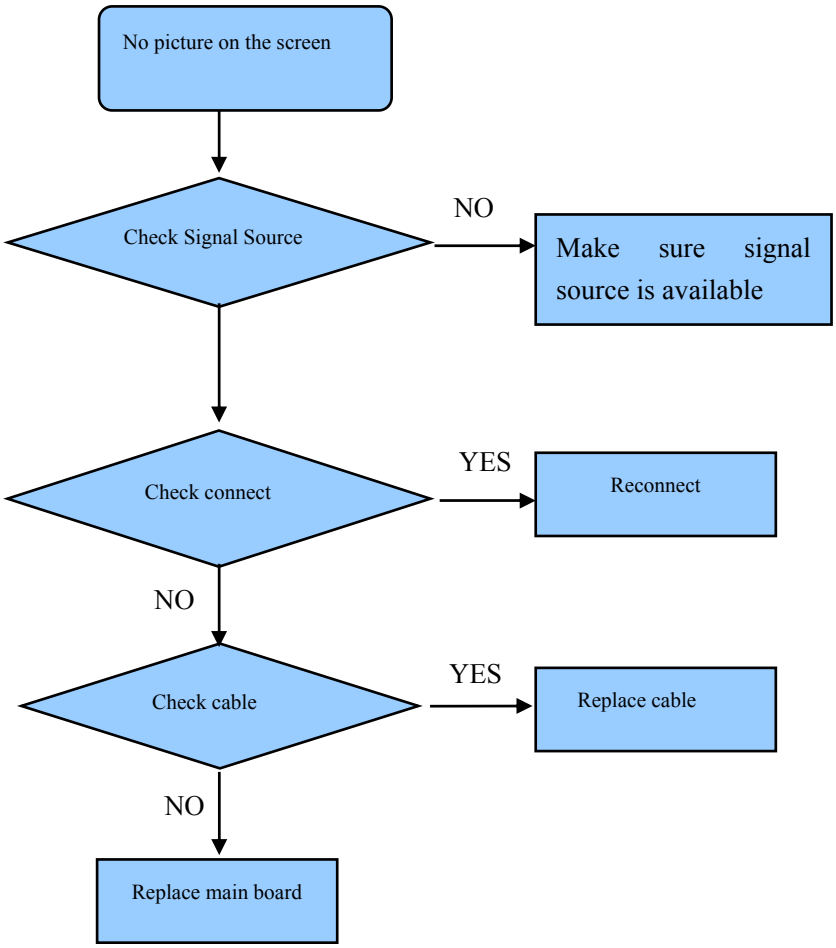

4.6 Troubleshooting for YPbPr input

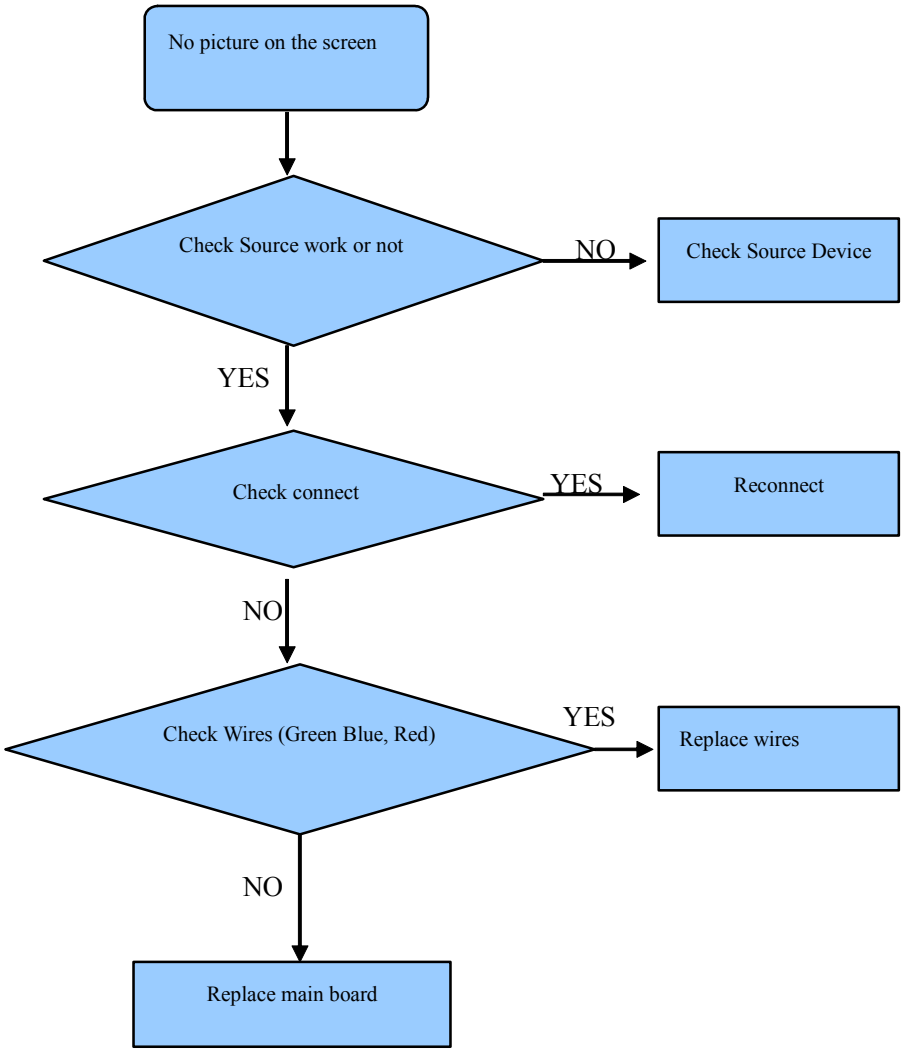

4.7 Troubleshooting for Video/S-Video/ SCART input

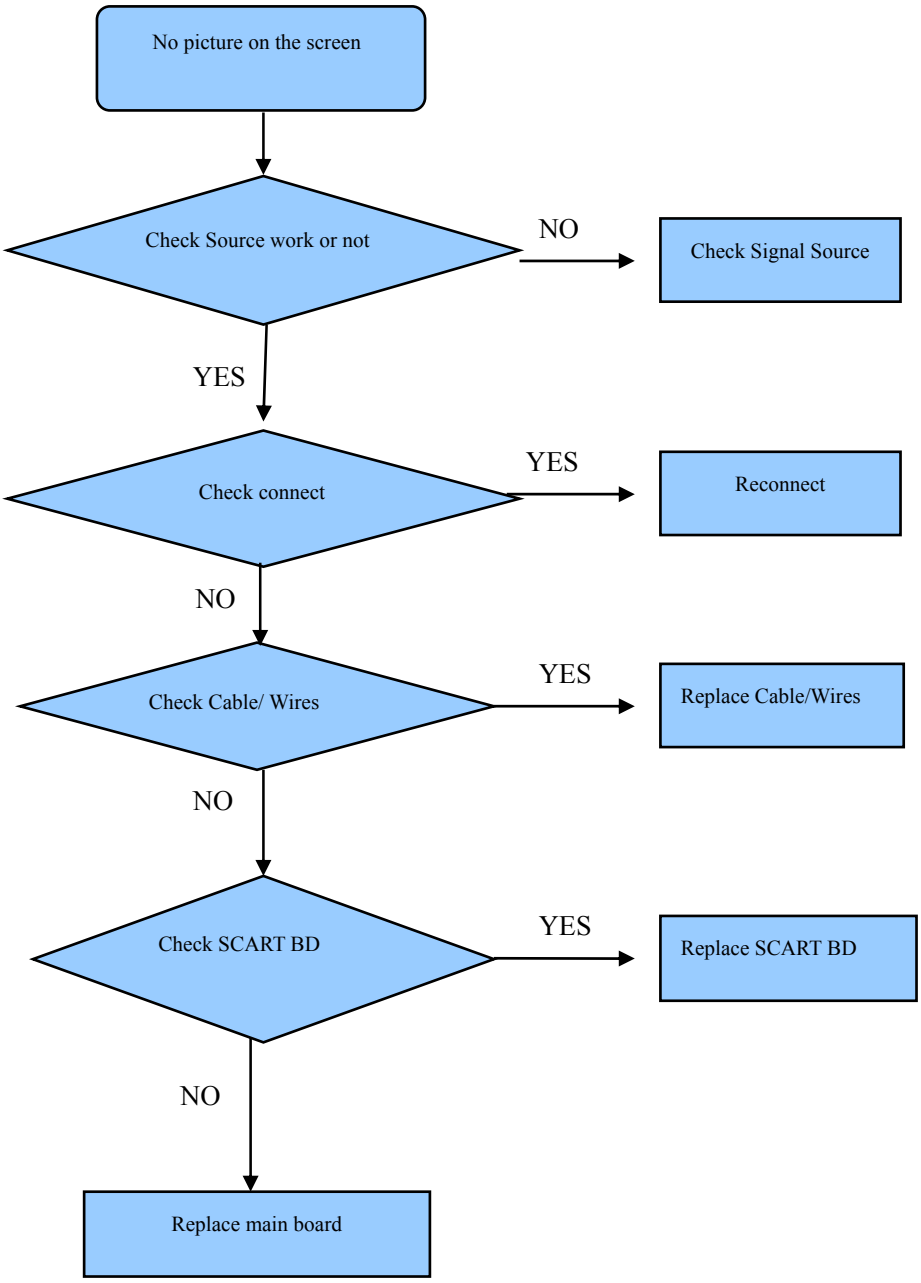

5. Schematic circuit diagram

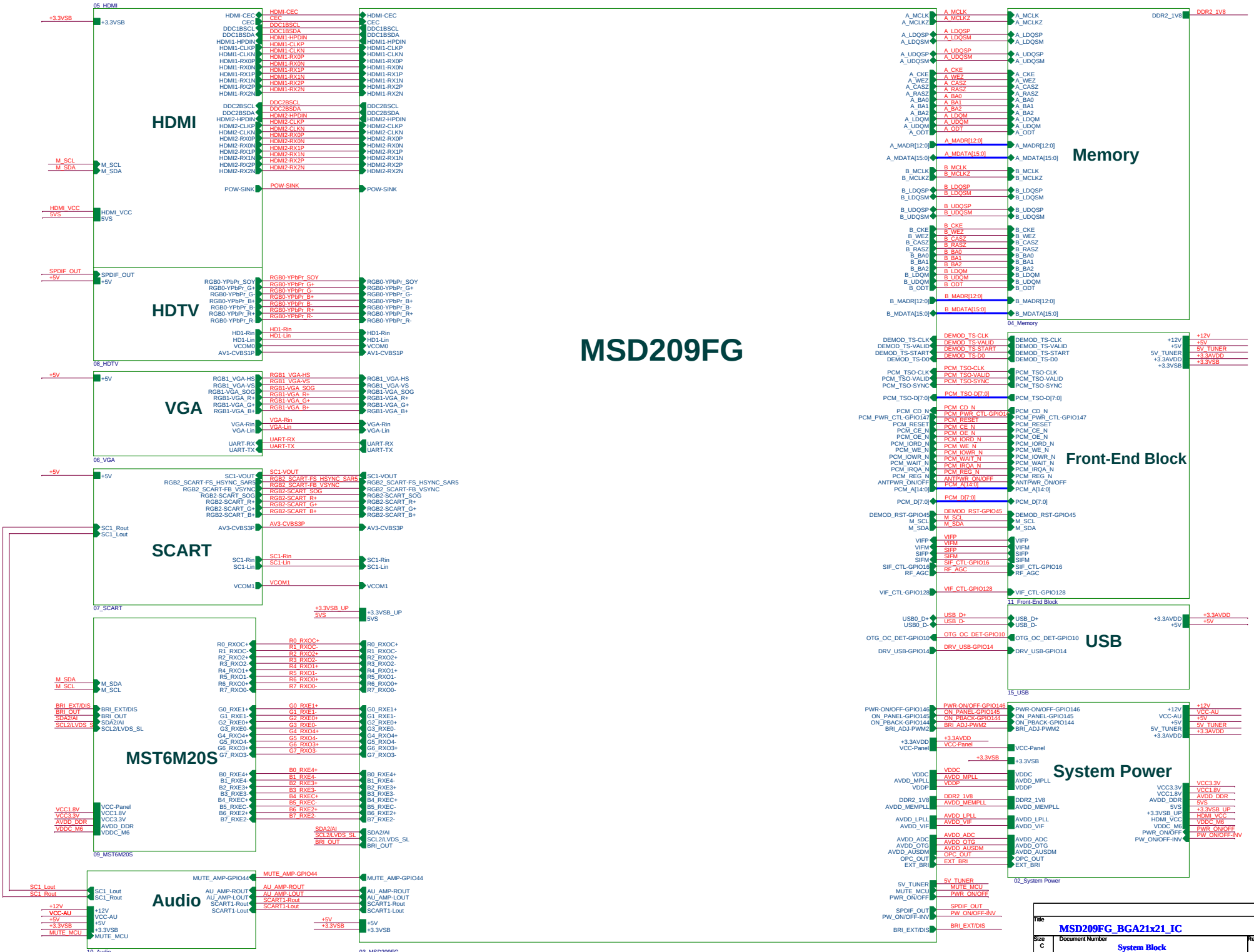
MSD209FG
HDMI
05_HDMI
HDTV
08_HDTV
VGA
06_VGA
SCART
07_SCART
MST6M20S
09_MST6M20S
Audio
10_Audio
03_MSD209FG
Memory
04_Memory
Front-End Block
11_Front-End Block
USB
15_USB
System Power
02_System Power
Title
MSD209FG_BGA21x21_IC
Size
C
Document Number
System Block
Rev
1.0
Date:
Thursday, August 27, 2009
Sheet
1
of
15

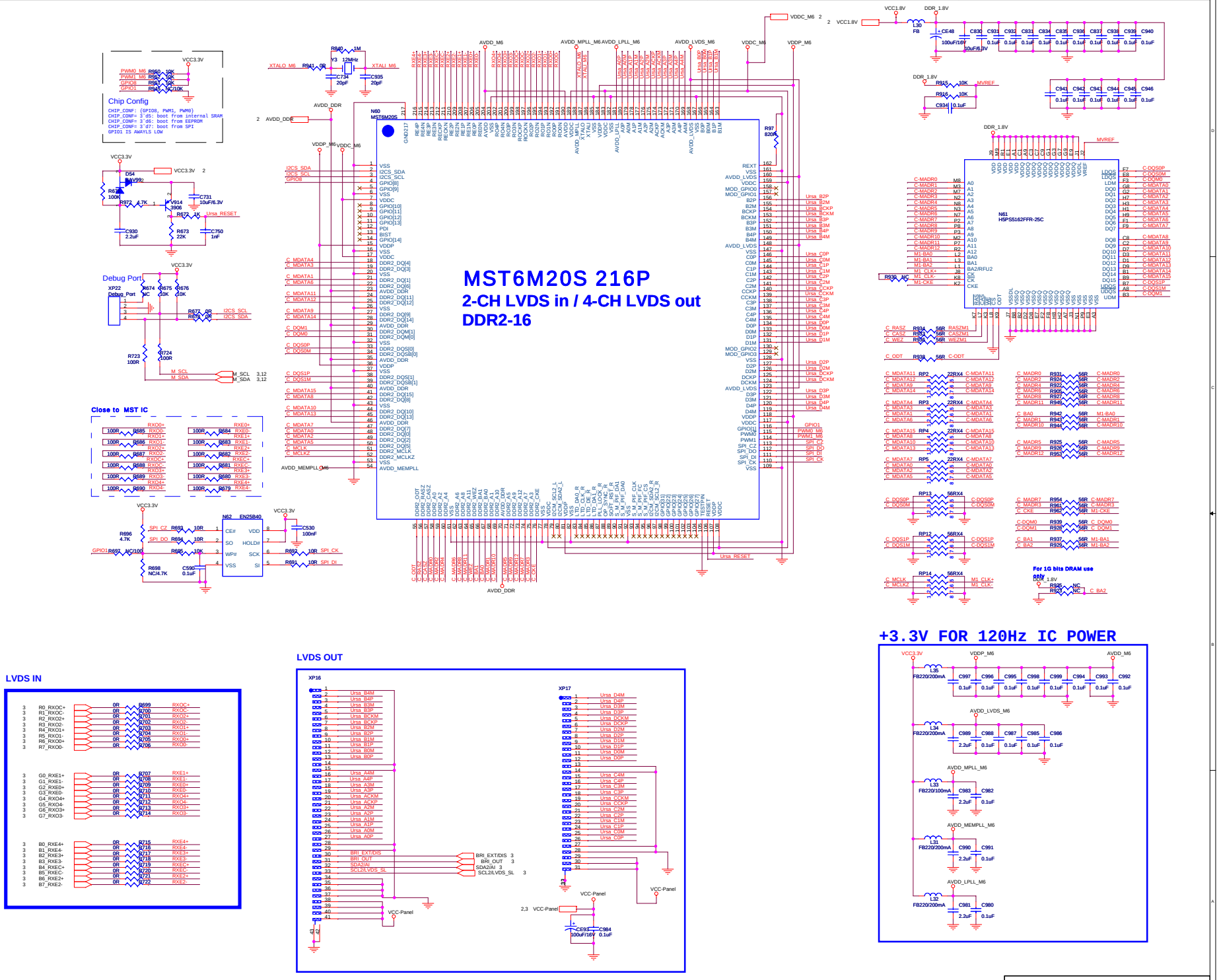

Title	<Title>	
Size Custom	Document Number <Doc>	Rev <RevCode>
Date: Friday, August 28, 2009	Sheet 1 of 1	

POWER INPUT

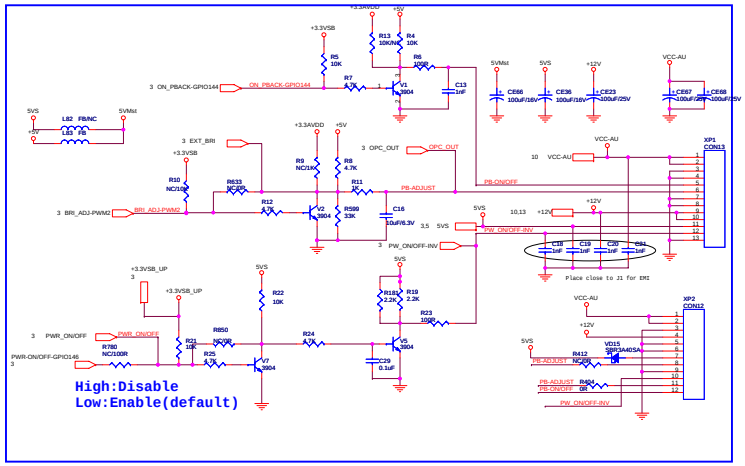

+1.28V FOR MSTAR IC STANDBY POWER

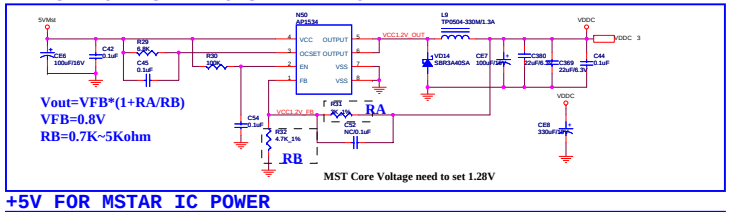

+5V FOR MSTAR IC POWER

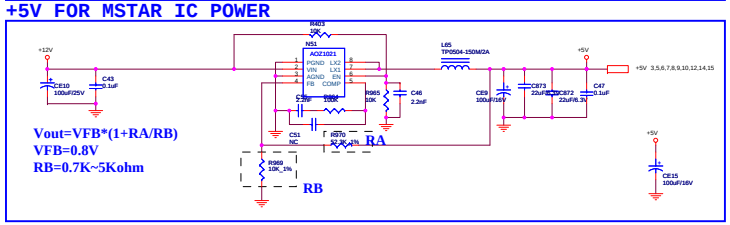

+3.3V STANDBY POWER

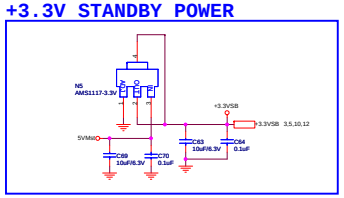

+3.3V NORMAL POWER

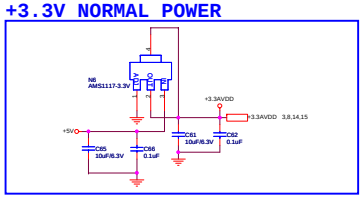

DC/DC FOR 120Hz IC POWER

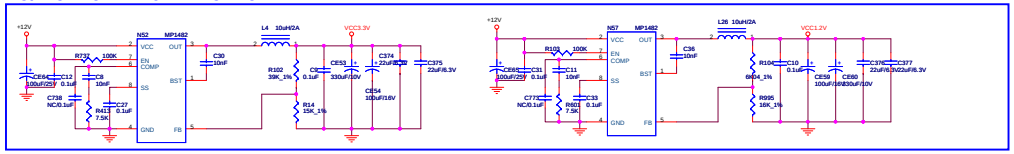

TUNER POWER

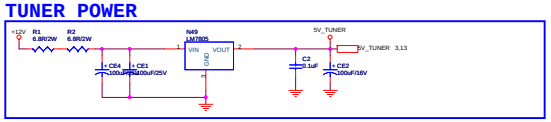

PANEL POWER

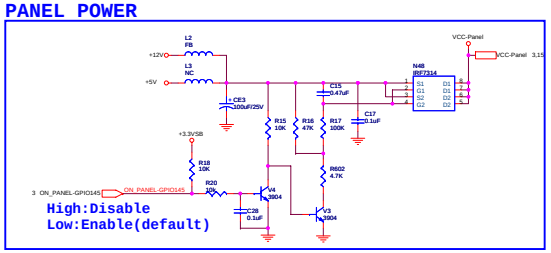

DDR2 Power

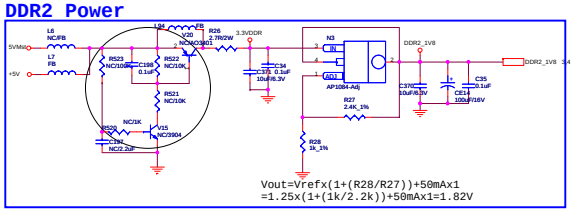

+3.3V NORMAL POWER

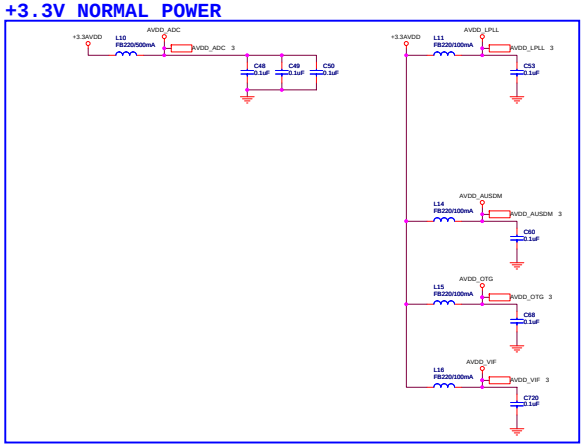

LDO FOR 120Hz IC POWER

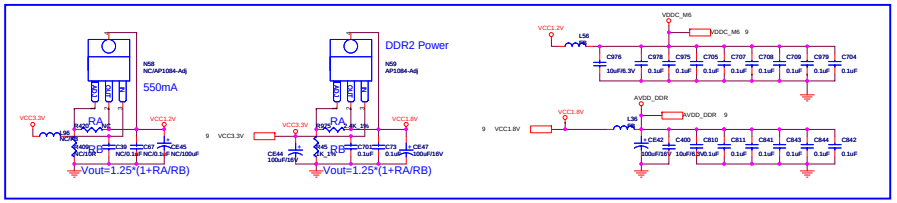

+1.28V FOR Core Power

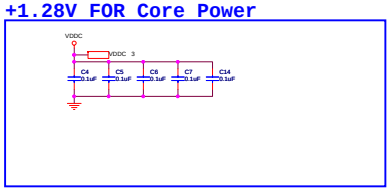

+1.8V FOR DDR2 NORMAL POWER

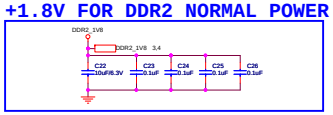

HDMI POWER

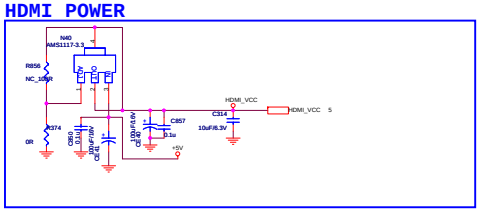

OPTIONAL FOR ESD

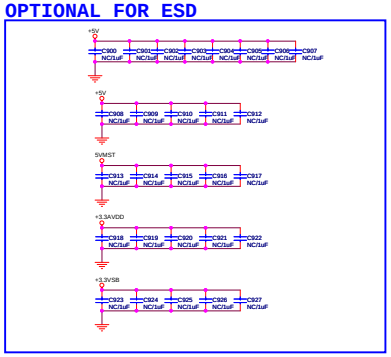

+3.3V STANDBY POWER

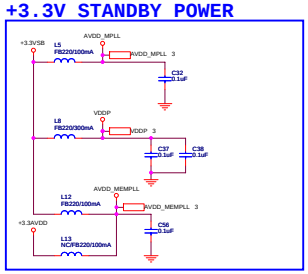

Title	MSD209FG_BGA21x21_IC		
Size D	Document Number		Rev 1.0
	System Power		
Date: Saturday, August 29, 2009	Sheet 2 of 15		

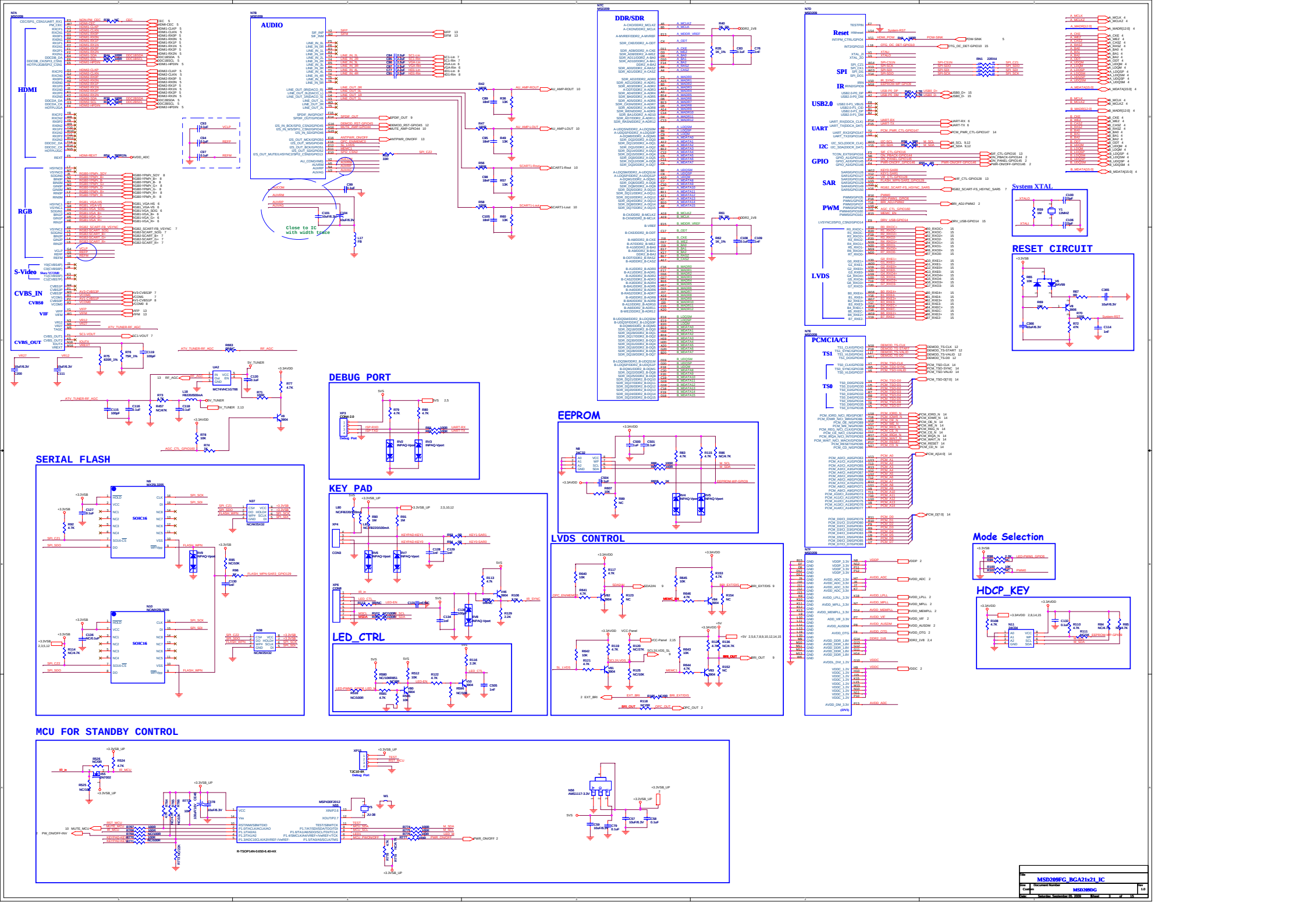
HDMI
RGB
S-Video
CVBS_IN
CVBS0
VIF
CVBS_OUT
AUDIO
DDR/SDR
Reset
SPI
IR
USB2.0
UART
I2C
GPIO
SAR
PWM
LVDS
System XTAL
RESET CIRCUIT
PCMCIA/CI
TS1
TS0
Mode Selection
HDCP_KEY
DEBUG PORT
EEPROM
SERIAL FLASH
KEY_PAD
LVDS_CONTROL
LED_CTRL
MCU FOR STANDBY CONTROL
Close to IC with width trace
MSD209FG_BGA21x21_IC
MSD209DG

1st DDR2 Chip

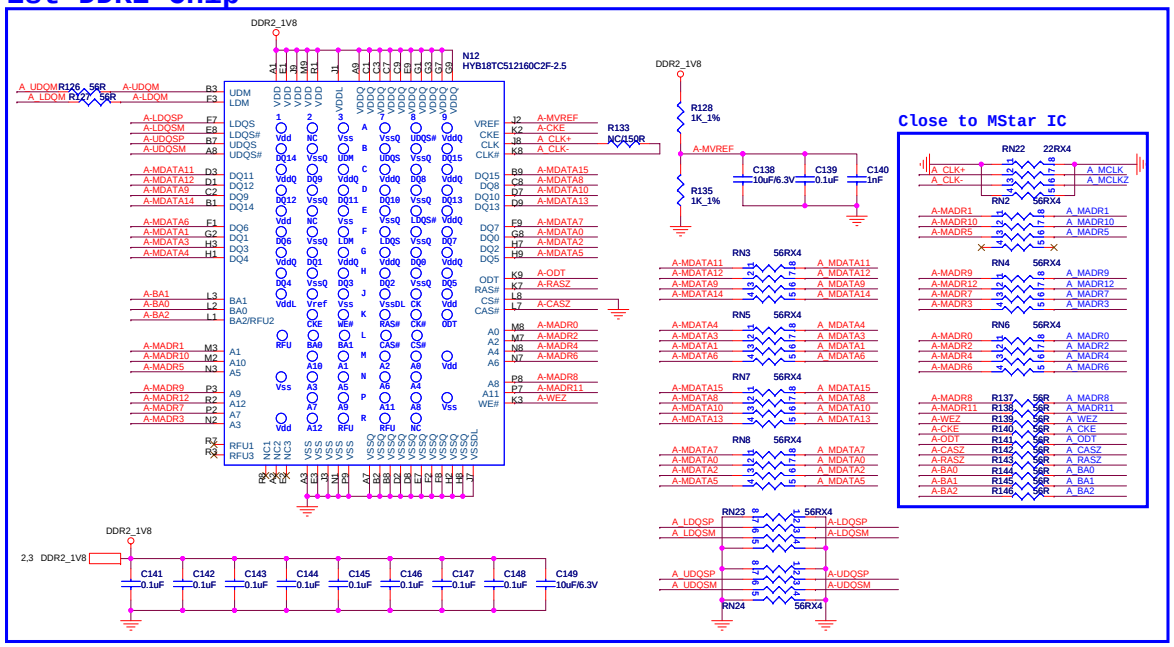

Close to MStar IC

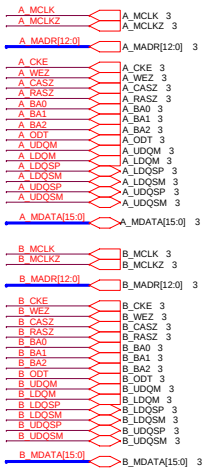

2nd DDR2 Chip

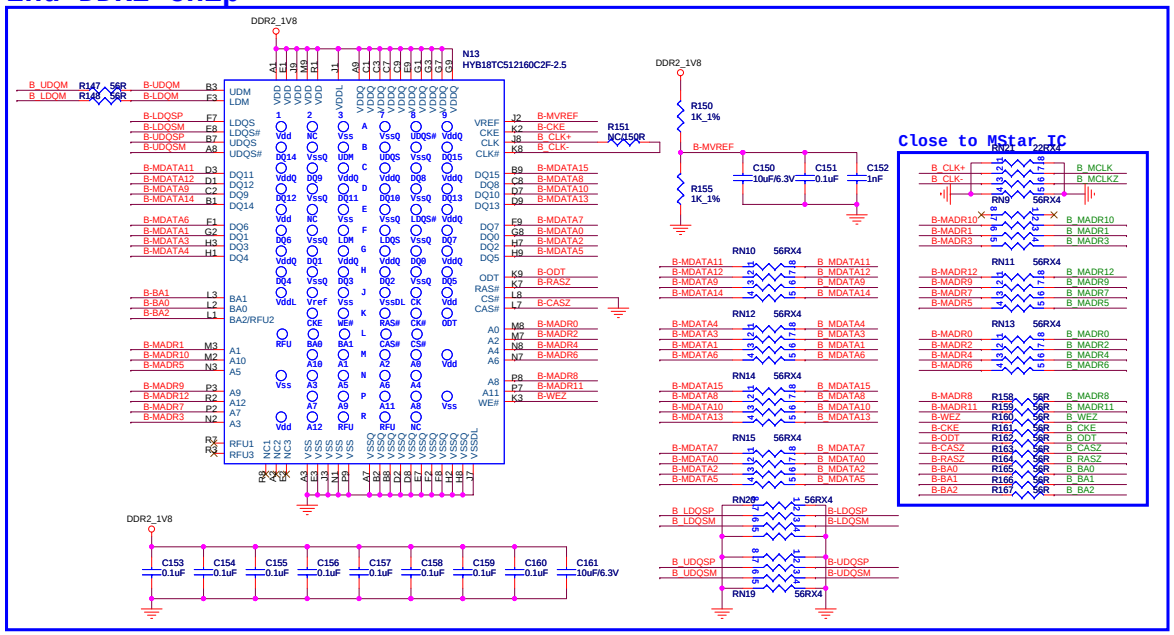

Close to MStar IC

Title		
MSD209FG_BGA21x21_IC		
Size C	Document Number DDR2_32Bit	Rev 1.0
Date: Tuesday, July 28, 2009	Sheet 4 of 15	

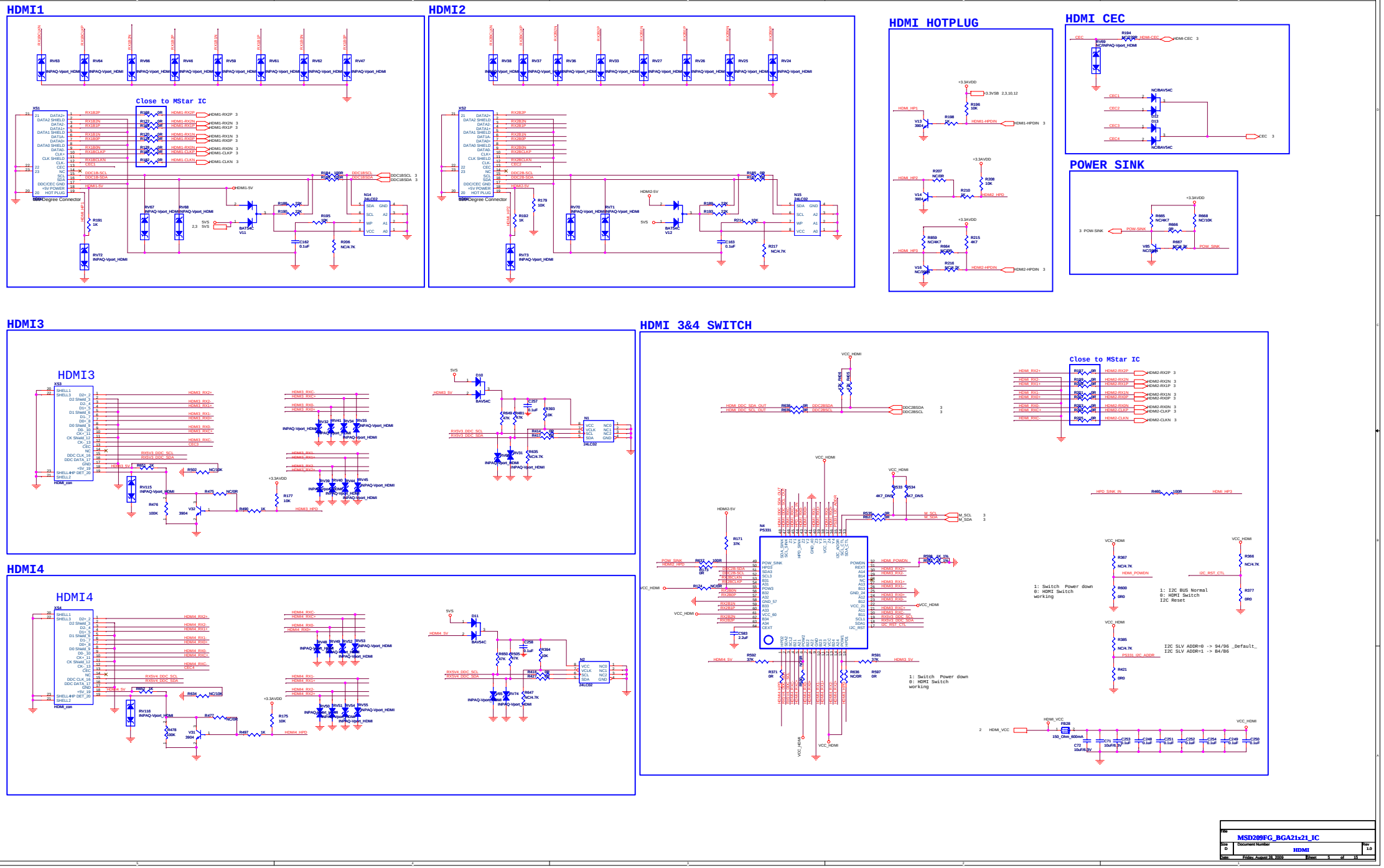
HDMI1
HDMI2
HDMI HOTPLUG
HDMI CEC
POWER SINK
HDMI3
HDMI 3&4 SWITCH
HDMI4
Close to MStar IC
Close to MStar IC
MSD209FG_BGA21x21_IC
HDMI
Date: Friday, August 28, 2009
Sheet 5 of 15

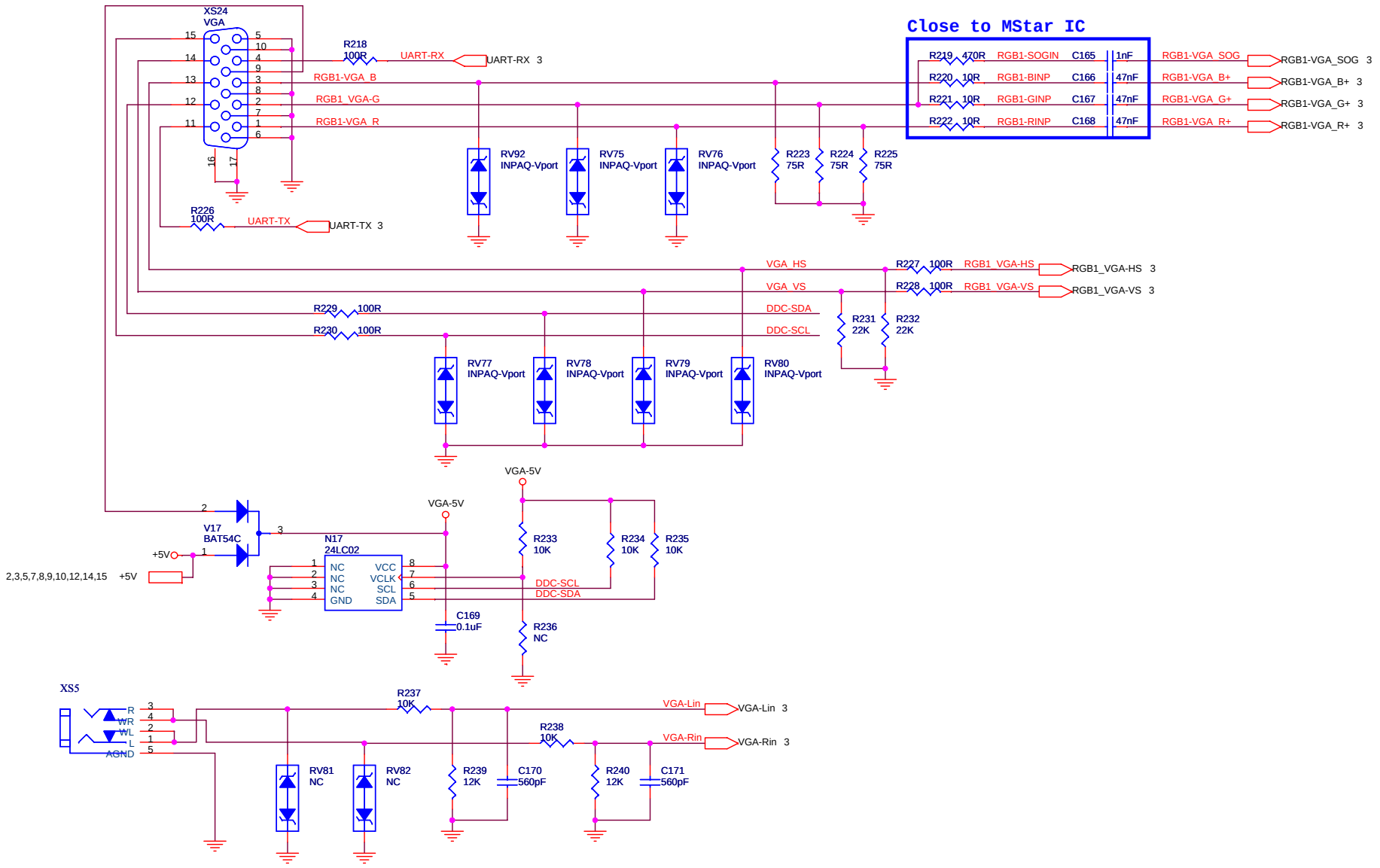

Title	MSD209FG_BGA21x21_IC	
Size B	Document Number VGA	Rev 1.0
Date: Tuesday, July 28, 2009	Sheet 6 of 15	

FULL SCART

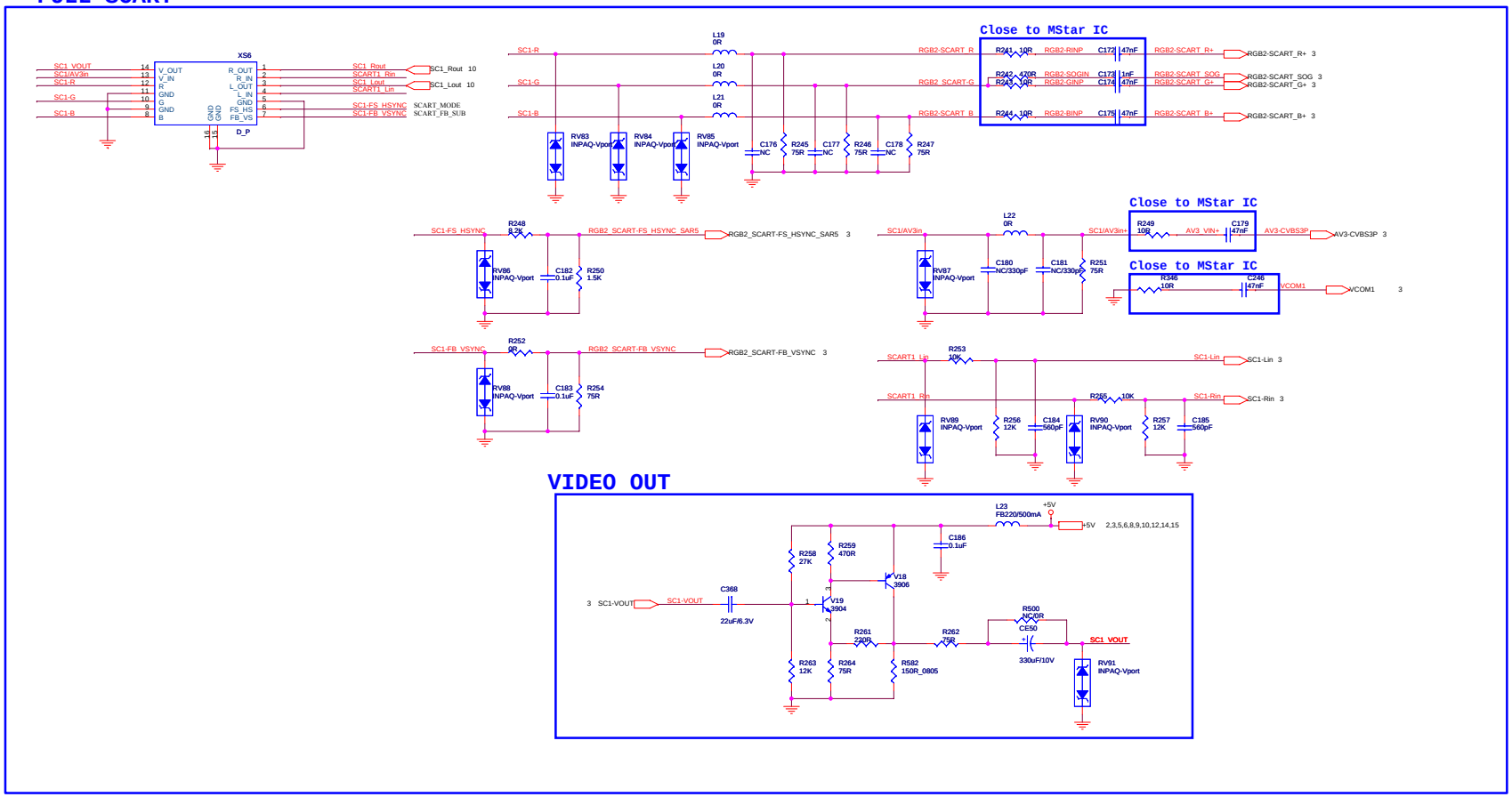

VIDEO OUT

Title	MSD209FG_BGA21x21_IC		
Size: Custom	Document Number: SCART		Rev: 1.0
Date: Thursday, August 27, 2009	Sheet 7 of 15		

YPbPr/AV INPUT

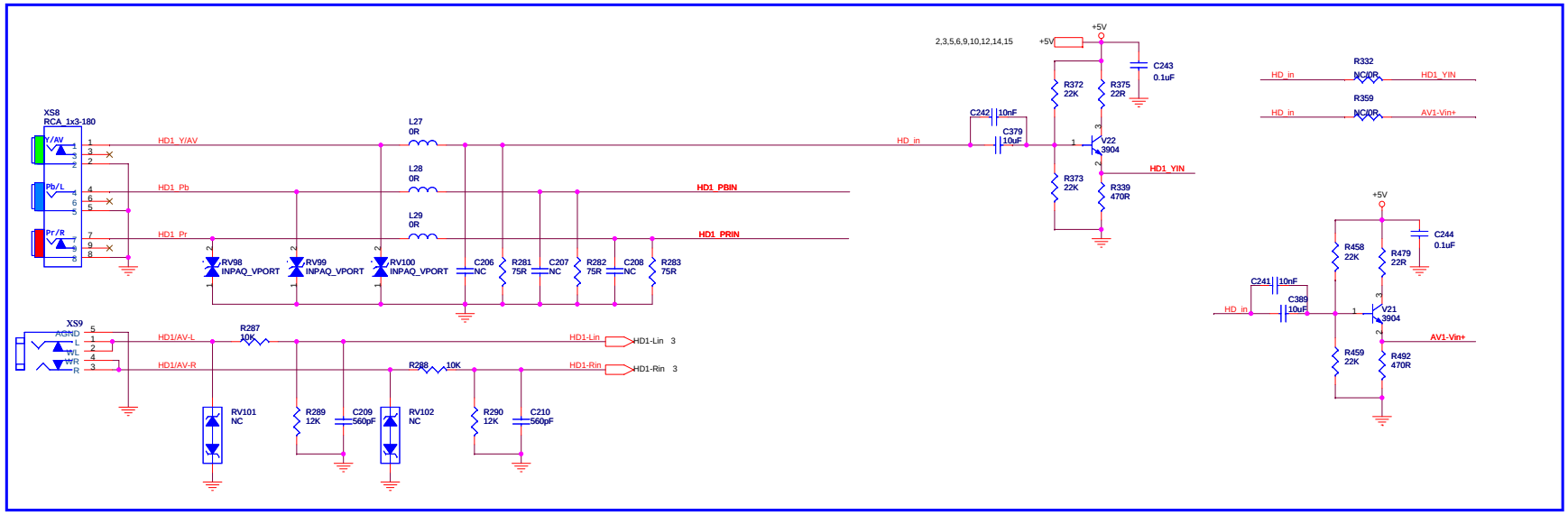

YPbPr/AV Video Input

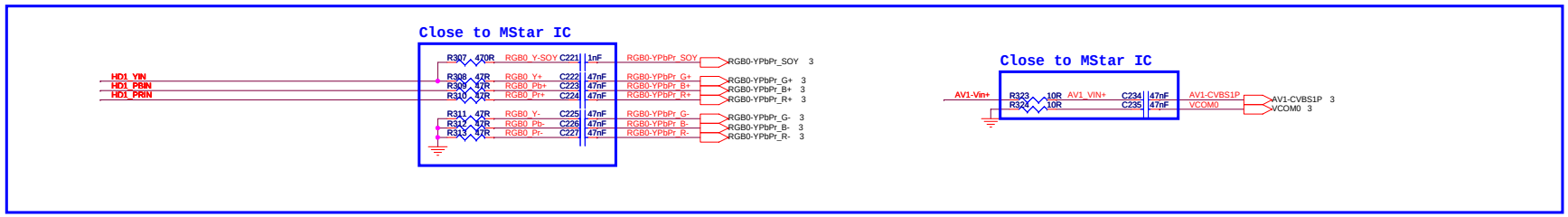

SPDIF OUT

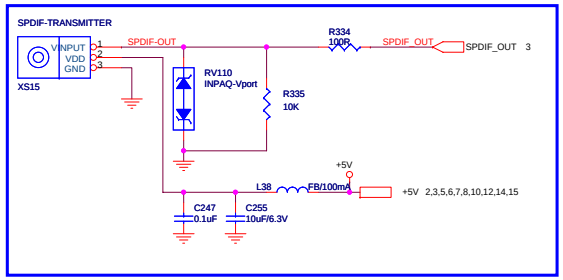

Title	MSD209FG_BGA21x21_IC	
Size C	Document Number HDTV	Rev 1.0
Date: Saturday, August 29, 2009	Sheet 8 of 15	

AUDIO OP

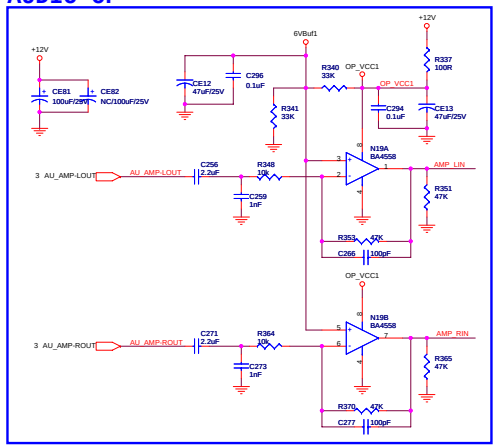

PH Drive & Ear Phone

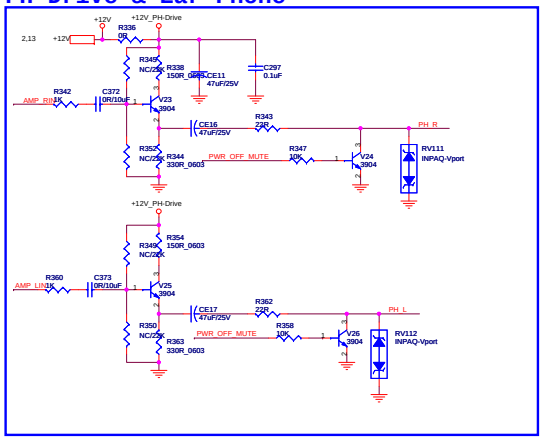

Power Ampifier TPA3101D

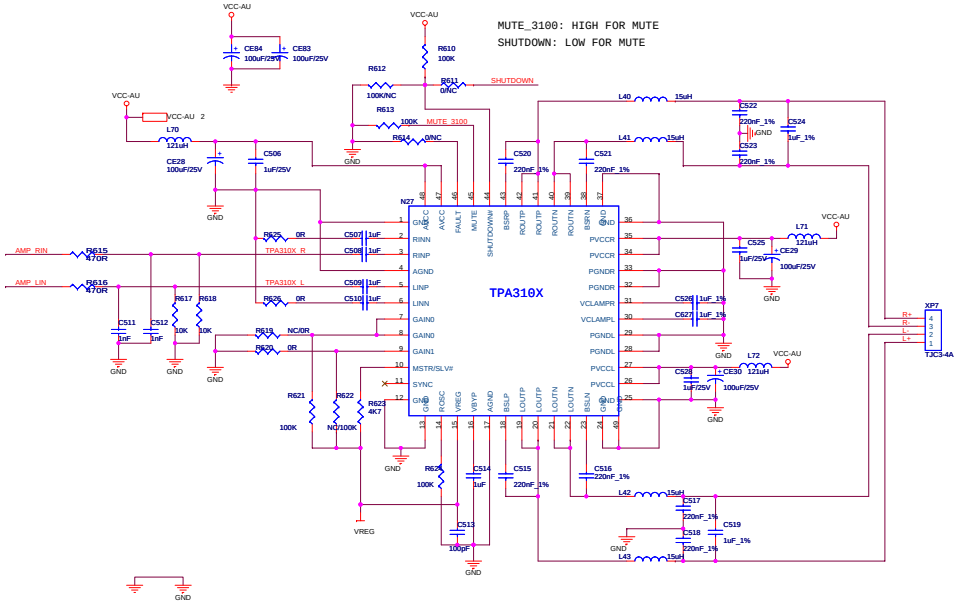

SCART1 Audio Out

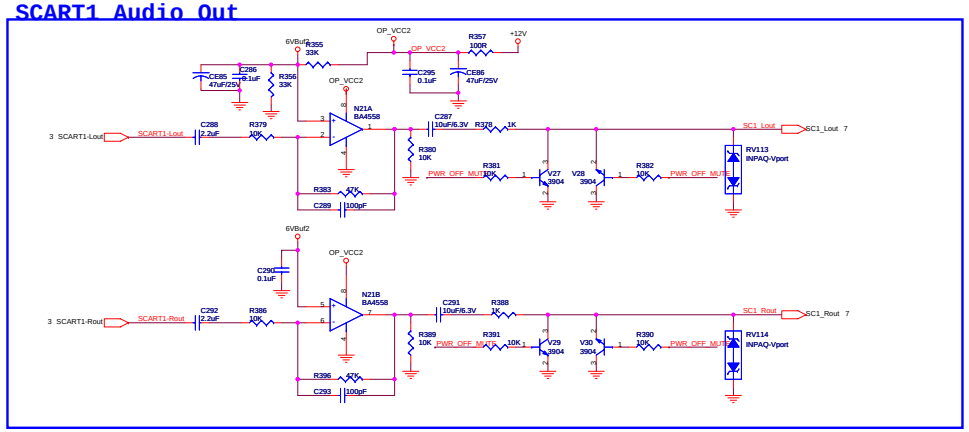

MUTE Circuit & Ear Phone

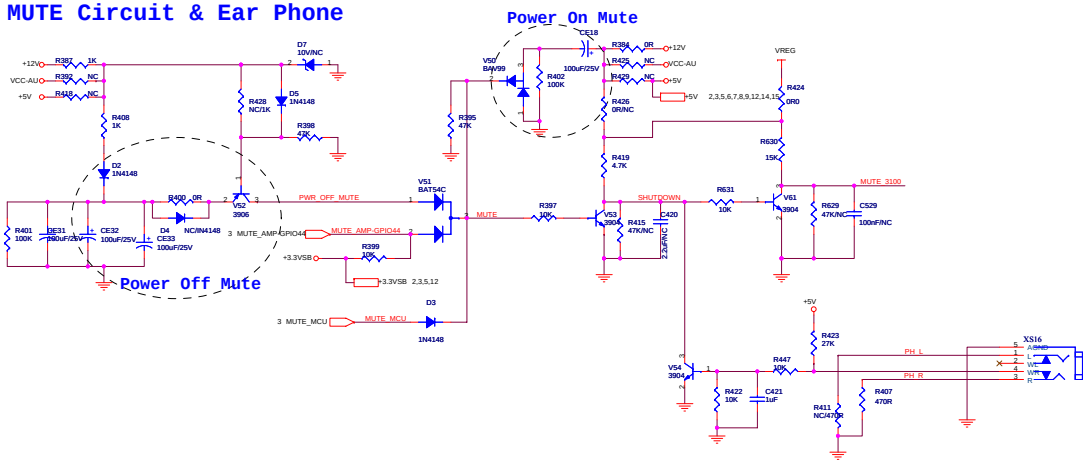

Title	MSD209FG_BGA21x21_IC		
Size: Custom	Document Number: AUDIO		Rev: 1.0
Date: Thursday, August 27, 2009	Sheet 10 of 15		

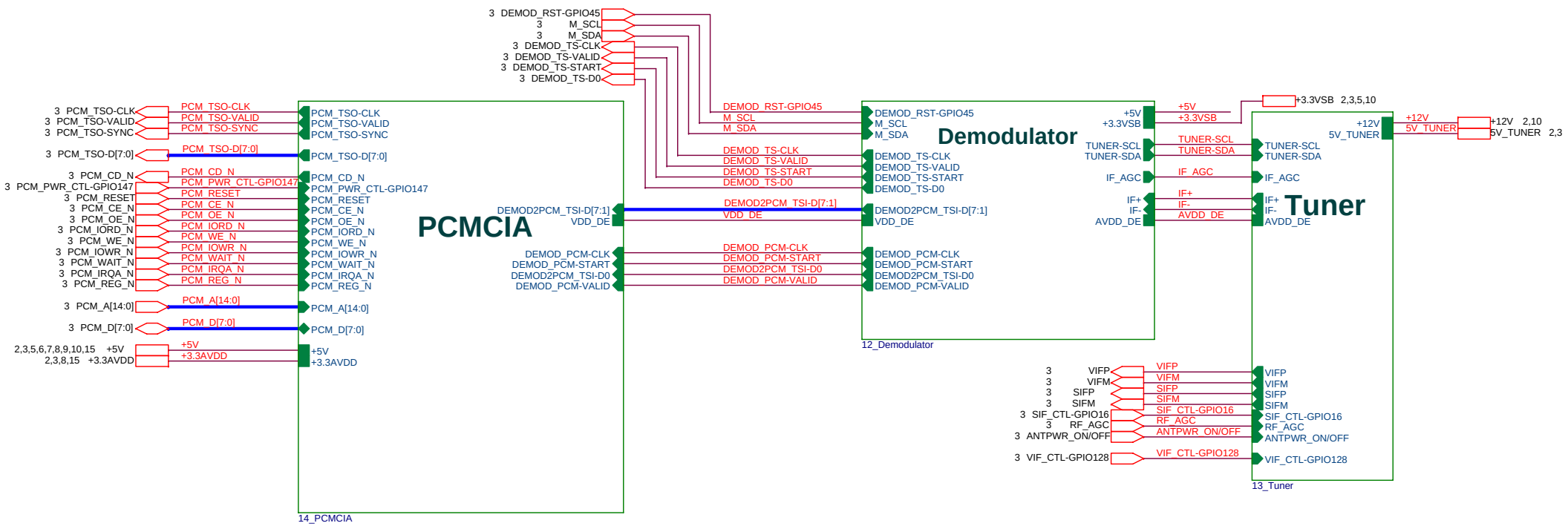

Title	MSD209FG_BGA21x21_IC	
Size B	Document Number Front-End Block	Rev 1.0
Date: Tuesday, July 28, 2009	Sheet 11 of 15	

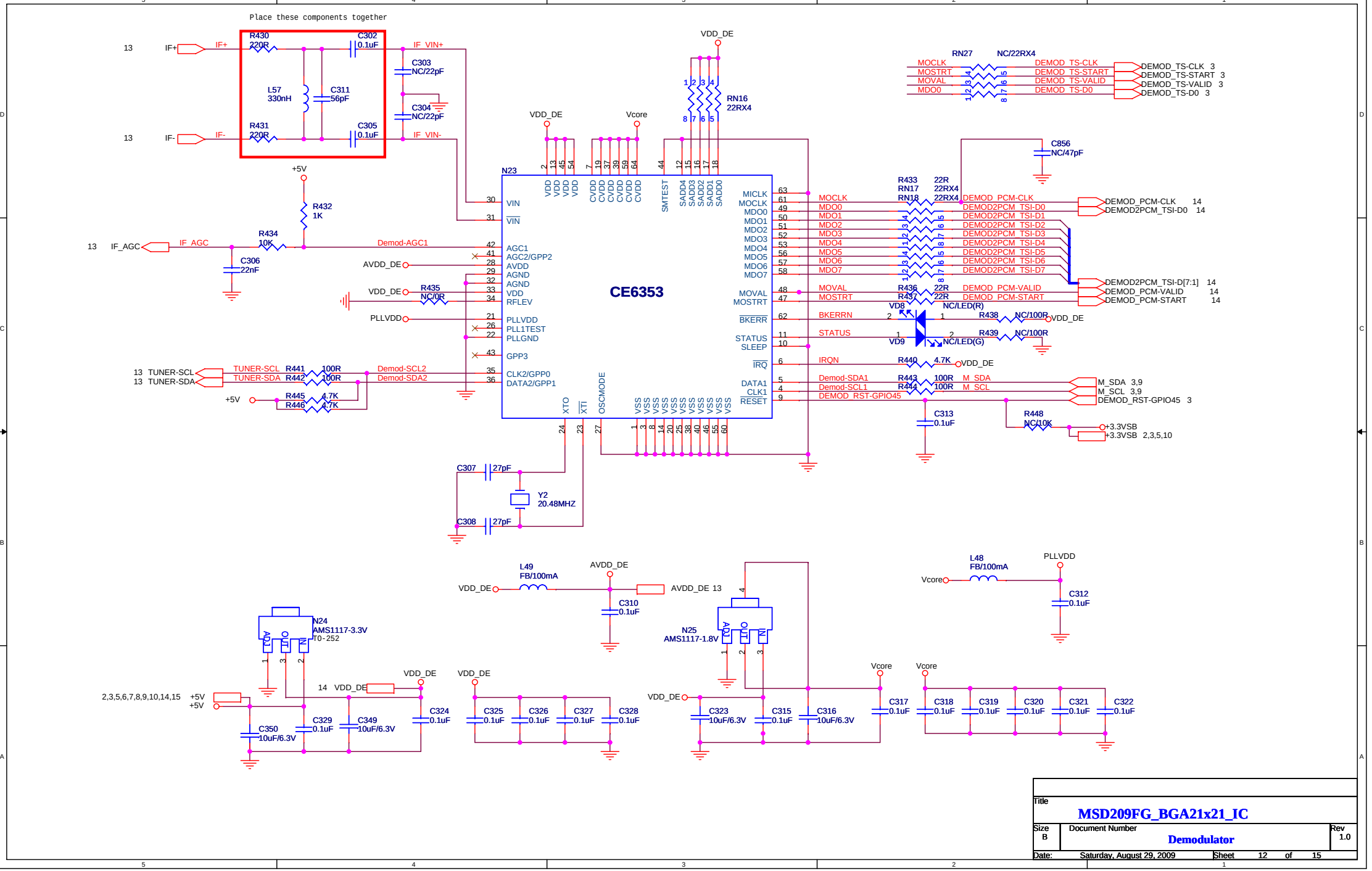

Title
MSD209FG_BGA21x21_IC

Size B | Document Number **Demodulator** | Rev 1.0

Date: Saturday, August 29, 2009 | Sheet 12 of 15

NXP Tuner

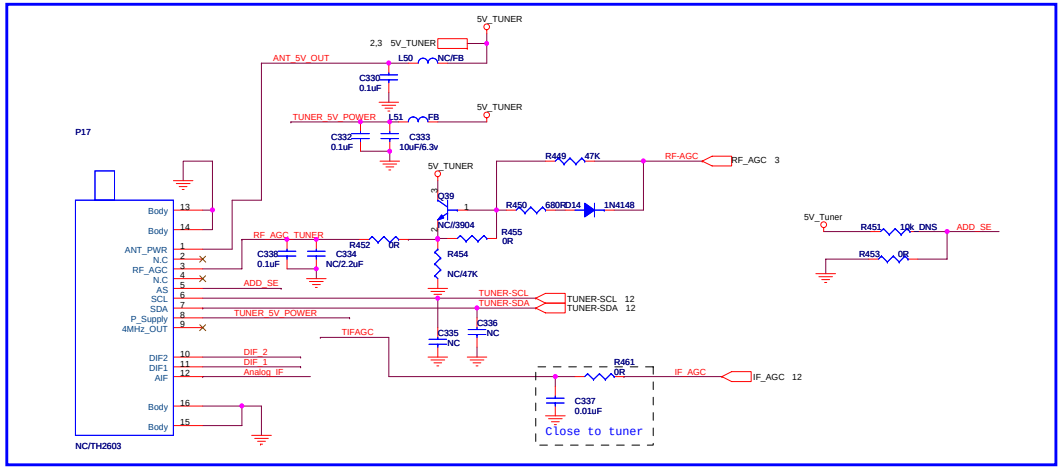

LG Tuner(optional)

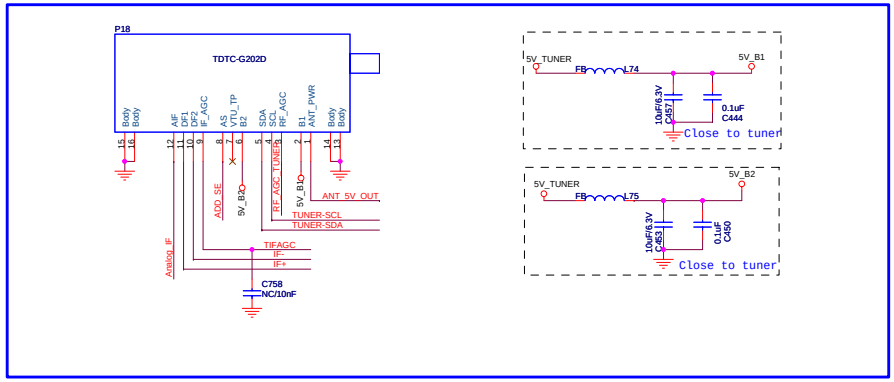

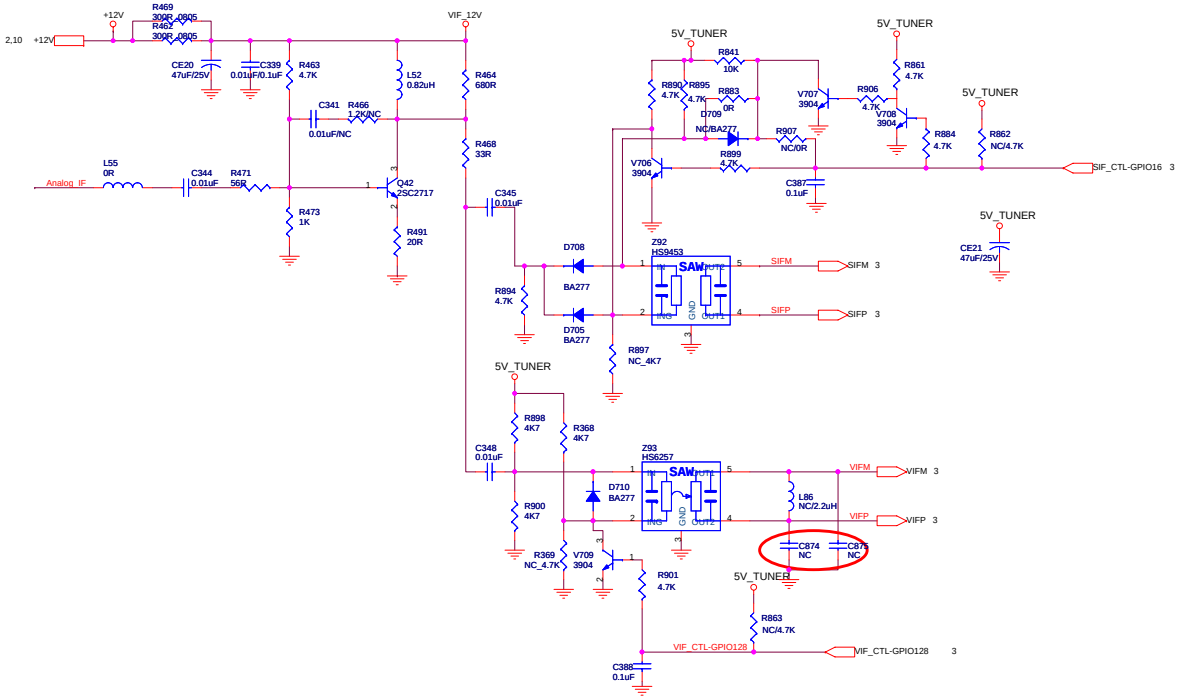

ANT POWER

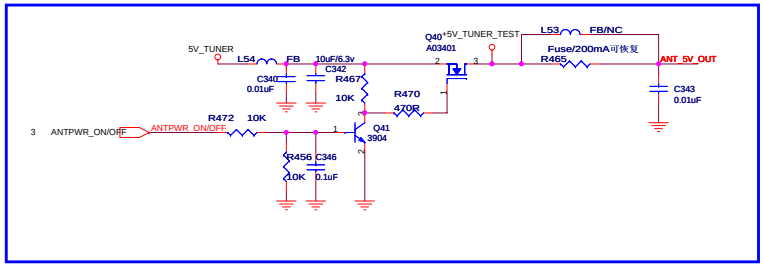

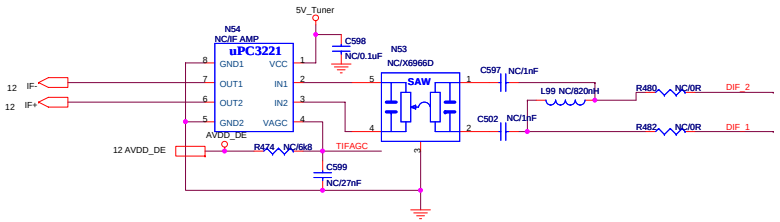

Title	MSD209FG_BGA21x21_IC	
Size: Custom	Document Number: Tuner	Rev: 1.0
Date: Friday, August 28, 2009	Sheet 13 of 15	

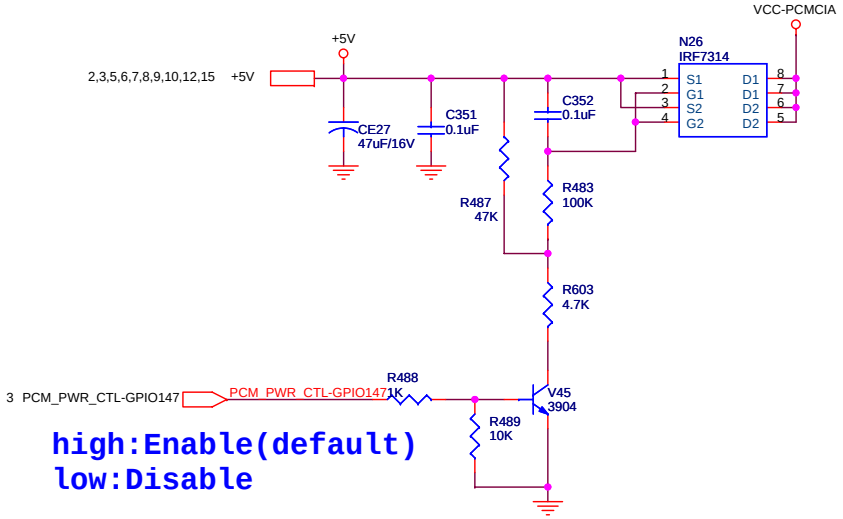

high:Enable(default)
low:Disable

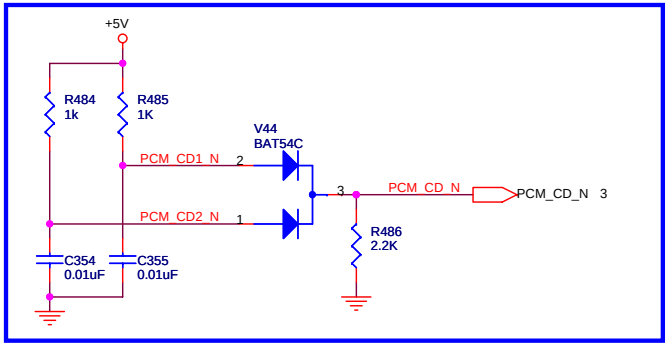

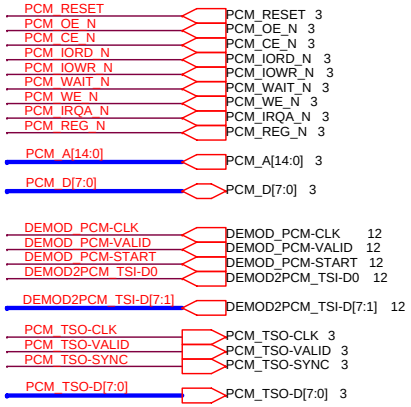

Parrael TS for EMI

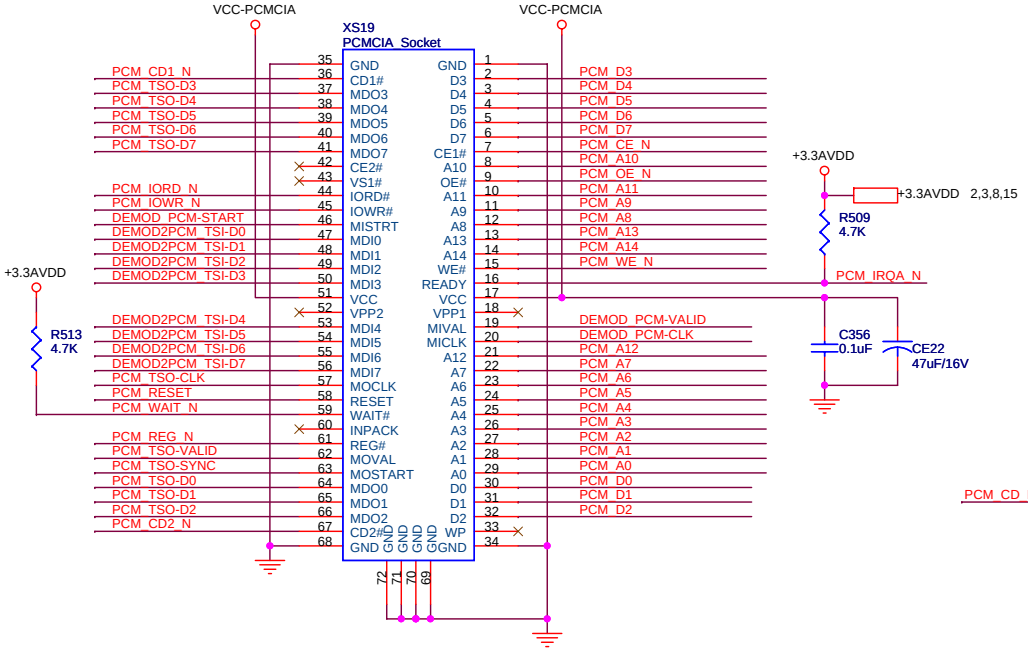

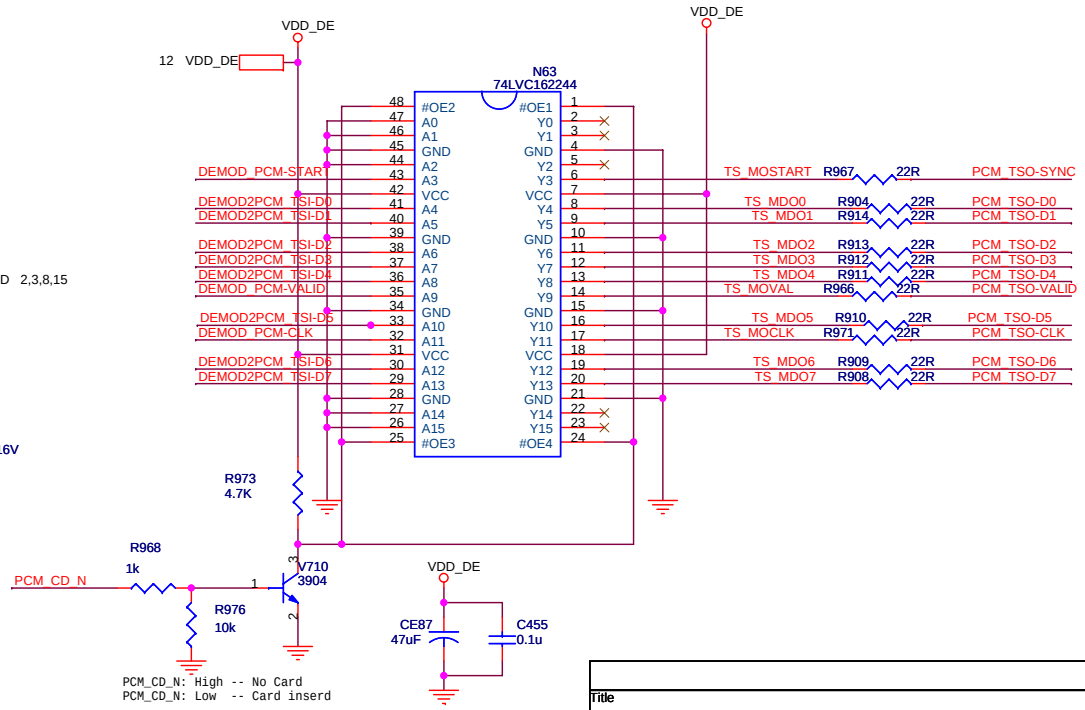

Title	MSD209FG_BGA21x21_IC		
Size B	Document Number PCMCIA		Rev 1.0
Date: Friday, August 28, 2009		Sheet 14 of 15	

USB HOST

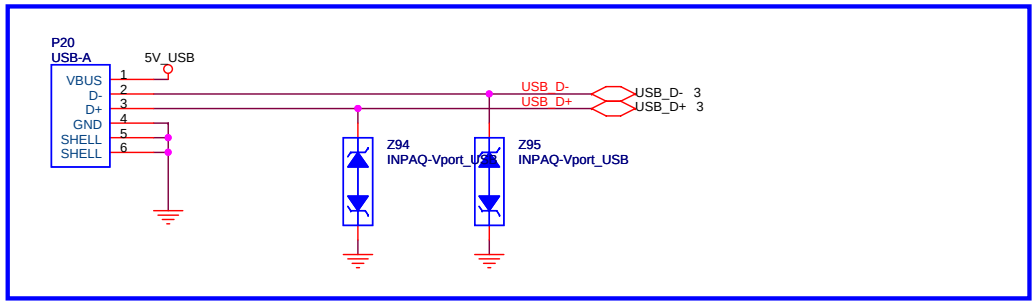

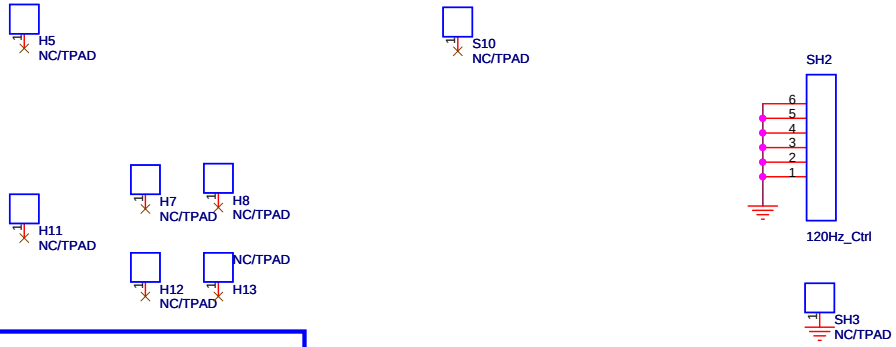

过流保护

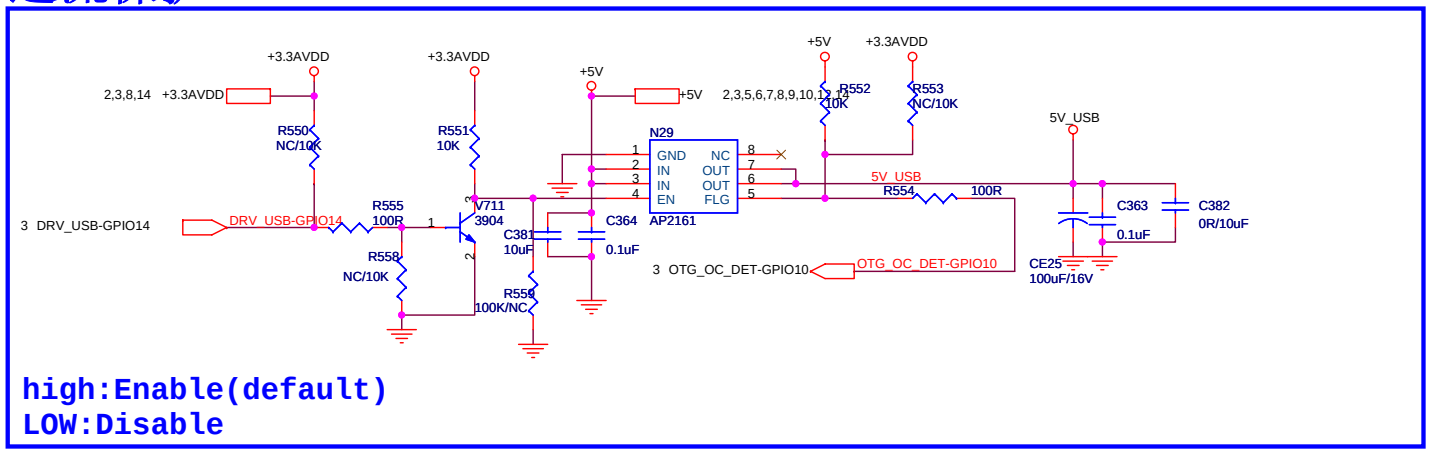

high:Enable(default)
LOW:Disable

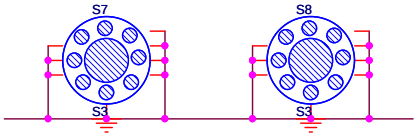

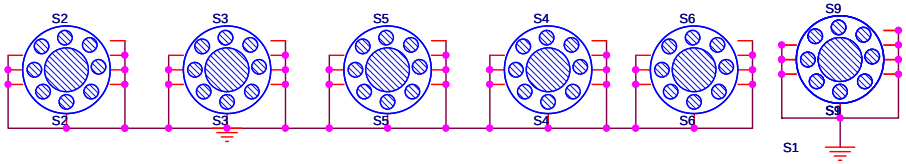

Title	MSD209FG_BGA21x21_IC	
Size B	Document Number USB	Rev 1.0
Date: Friday, August 28, 2009	Sheet 15 of 15	